Table of Contents

1. Device under Test and Test Facilities 3
1.1. Device under Test 3
1.2. Test Facilities 3
1.3. History 3
2. Terminology and Summary Results 4
2.1. Terminology 4
2.2. Summary Results 5
A Call Setup with Access Gateway 7
A.1 Setup Ratio by Single Call Rate 8
A.2 Setup Ratio by Multiple Calls 9
A.3 Setup Ratio by Multiple Call Rate 10
A.4 Setup Ratio by WAN Packet Loss Ratio 11
A.5 Setup Ratio by WAN Packet Dup. Ratio 12
A.6 Setup Ratio by BG FTP Session Number 13
A.7 Setup Ratio by BG FTP Session Rate 14
B Voice Quality with Access Gateway 15
B.1 Voice Quality by Multiple Calls 16
B.2 Voice Quality by Multiple Call Rate 17
B.3 Voice Quality by WAN Packet Loss Ratio 18
B.4 Voice Quality by WAN Packet Dup. Ratio 19
B.5 Voice Quality by WAN Delay Distribution 20
B.6 Voice Quality by BG FTP Session Number 21
B.7 Voice Quality by BG FTP Session Rate 22
C Call Setup through Exchange/Router 23
C.1 Setup Ratio by Single Call Rate 25
C.2 Setup Ratio by Multiple Calls 26
C.3 Setup Ratio by Multiple Call Rate 27
C.4 Setup Ratio by WAN Packet Loss Ratio 28
C.5 Setup Ratio by WAN Packet Dup. Ratio 29
C.6 Setup Ratio by BG FTP Session Number 30
C.7 Setup Ratio by BG FTP Session Rate 31
D Voice Quality through Exchange/Router 32
D.1 Voice Quality by Multiple Calls 33
D.2 Voice Quality by Multiple Call Rate 34
D.3 Voice Quality by BG FTP Session Number 35
D.4 Voice Quality by BG FTP Session Rate 36

1. Device under Test and Test Facilities

1.1. Device under Test

- Product Type (Exchange or Gateway only):
- Firmware Version:
- Analog FXO Port Number:
- Packet Interface (WAN):
- Packet Interface (LAN):

1.2. Test Facilities

- Spirent Abacus 5000 Chassis
- Spirent Enhanced Analog Call Generator (ECG3) Subsystem
- Spirent IP Telephony Call Generator (ICG3) Subsystem
- Spirent SmartBits 600/6000 Chassis
- Spirent LAN-3301A 2-port Gbps Ethernet TeraMetrics Module * 2
- Spirent SmartBits Avalanche/Reflector 7.02
- Brekeke OnDO SIP Server, http://www.brekeke.com/products/products_sip.php
- NIST-Net, http://www-x.antd.nist.gov/nistnet/

1.3. History

DUT 版本	測試時間

2. Terminology and Summary Results

2.1. Terminology

Device under Test

SIP Access Gateway	Analog FXS port(s) 802.3/u/ab Ethernet WAN port IP or NAT Router SIP Subscriber(s) (for Analog Telephone)
SIP Exchange	802.3/u/ab Ethernet or 802.11/b/a/g Wireless LAN 802.3/u/ab Ethernet WAN port with SIP Server (Registrar and/or Proxy)
SIP Private Business Exchange (PBX)	Integration of the above

Call Generation Timing

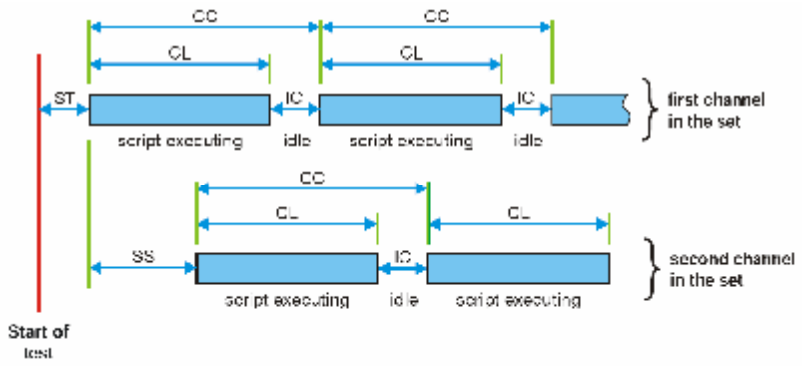

Start Time (ST)	Time of first channel starts to execute its first script
Call Length (CL)	Time for the path confirmation in the script
Inter-Call Time (IC)	Time between the end and the next start of the script
Call-to-Call Time (CC)	Time between the start and the next start of the script
Start-to-Start Time (SS)	Time after previous channel to start its first script

PS. The script executing time may be a little more then the CL

Path Confirmation

Packet only	RTP packets only (without voice)
3-tone	Sequence of 404, 1004 and 1804 Hz signals of 150 ms
PESQ-123	Do measurement of PESQ using the 123 voice sample

2.2. Summary Results

A. Call Setup with Access Gateway

Result / Factor	Acceptable Load of Factor when Setup Ratio = 100%
A.1 Single Call Rate (call/min)	
A.2 Multiple Calls (call)	
A.3 Multiple Call Rate (call/min)	
A.4 WAN Packet Loss Ratio (%)	
A.5 WAN Packet Dup. Ratio (%)	
A.6 BG FTP Session Number (session)	
A.7 BG FTP Session Rate (session/min)	

B. Voice Quality with Access Gateway

Result / Factor	Acceptable Load of Factor when Voice Quality (min. PESQ) >= 4
B.1 Multiple Calls (call)	
B.2 Multiple Call Rate (call/min)	
B.3 WAN Packet Loss Ratio (%)	
B.4 WAN Packet Dup. Ratio (%)	
B.5 WAN Delay Distribution (msec)	
B.6 BG FTP Session Number (session)	
B.7 BG FTP Session Rate (session/min)	

C. Call Setup through Exchange/Router

Result / Factor	Acceptable Load of Factor when Setup Ratio = 100%
C.1 Single Call Rate (call)	
C.2 Multiple Calls (%)	
C.3 Multiple Call Rate (call/min)	
C.4 WAN Packet Loss Ratio (%)	
C.5 WAN Packet Dup. Ratio (%)	
C.6 BG FTP Session Number (session)	
C.7 BG FTP Session Rate (session/min)	

D. Voice Quality through Exchange/Router

Result / Factor	Acceptable Load of Factor when Voice Quality (min. PESQ) >= 4
D.1 Multiple Calls (call)	
D.2 Multiple Call Rate (call/min)	
D.3 BG FTP Session Number (session)	
D.4 BG FTP Session Rate (session/min)	

A Call Setup with Access Gateway

Call Setup with Gateway 是要測試 DUT 在用做 SIP Access Gateway 時(也就是 FXS 方的 Analog Subscriber 與 WAN 方的 SIP Subscriber 互相撥打電話），考慮不同的壓力因素下，撥打的建立狀況。所有項目的設計，皆是以調整特定的壓力因素來觀察有哪些因素值能夠滿足完全撥打成功率（100% Call Setup Ratio）。

所有用於 Test Group A 的 Topologies 連接示意圖：

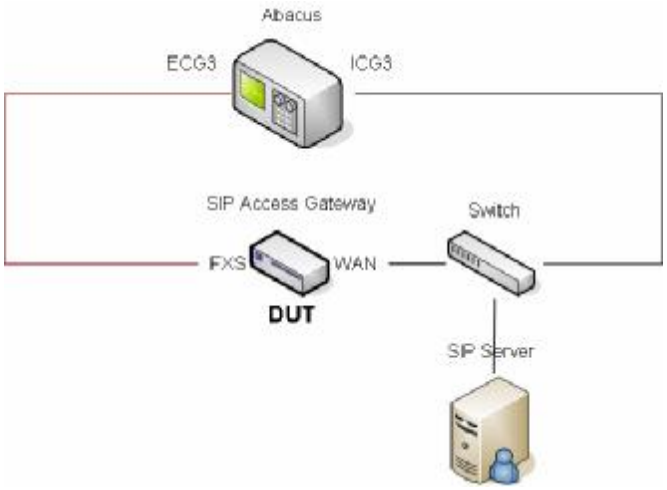

圖 1：Analog → SIP for Call Stress

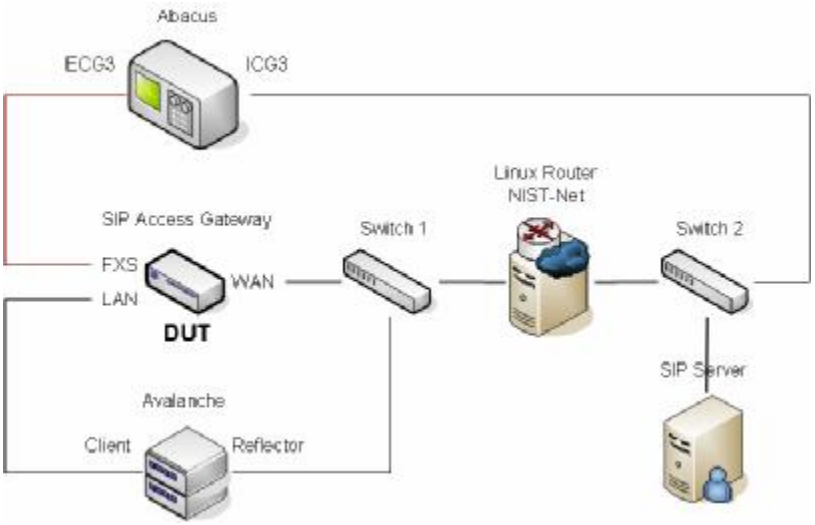

圖 2：Analog → SIP with Impairment/Congestion

A.1 Setup Ratio by Single Call Rate

測試目的

測試 DUT 在只有一個 Call 時，不同 Call-to-Call Time 值的 Setup Ratio。

測試變因

- Call-to-Call Time (CC) (sec): 60, 30, 20, 10, 6, 3
  相當於 Call Rate (call/min): 1, 2, 3, 6, 10, 20

測試組態

- Subscribers: 1 * Analog + 1 * SIP
- Start Time (ST) (sec): 15
- Call Length (CL) (sec): 3-tone Confirm Length
- Inter-Call Time (IC) (sec): 0 (let CC dominates)
- Start-to-Start Time (SS) (sec): not affects
- Path Confirmation: 3-tone
- Trials per Subscriber: 20
- Environment: 參考圖 1

測試結果

SIP → Analog

Call Rate						
Setup Ratio						

Analog → SIP

Call Rate						
Setup Ratio						

A.2 Setup Ratio by Multiple Calls

測試目的

測試 DUT 在多個 Call 時，不同 Call 數量值的 Setup Ratio。

測試變因

- Multiple Calls (C): 1, 2, 5, 7, 10, 14

測試組態

- Subscribers: C * Analog + C * SIP
- Start Time (ST) (sec): 15
- Call Length (CL) (sec): 3-tone Confirm Length
- Inter-Call Time (IC) (sec): 0 (let CC dominates)
- Call-to-Call Time (CC) (sec): 60
- Start-to-Start Time (SS) (sec): 20
- Path Confirmation: 3-tone
- Trials per Subscriber: 20
- Environment: 參考圖 1

測試結果

SIP → Analog

Calls						
Setup Ratio						

Analog → SIP

Calls						
Setup Ratio						

A.3 Setup Ratio by Multiple Call Rate

測試目的

測試 DUT 在多個 Call 時，不同 Start-to-Start Time 值的 Setup Ratio。

測試變因

- Start-to-Start Time (SS) (sec): 20, 10, 6, 3, 2, 1
  相當於 Call Rate (call/min): 3, 6, 10, 20, 30, 60

測試組態

當 A.2 測試結果的 Multiple Calls 最大值為 C_{max}

- Subscribers: C_{max} * Analog + C_{max} * SIP
- Multiple Calls (C): C_{max}
- Start Time (ST) (sec): 15
- Call Length (CL) (sec): 3-tone Confirm Length
- Inter-Call Time (IC) (sec): 0 (let CC dominates)
- Call-to-Call Time (CC) (sec): 60
- Path Confirmation: 3-tone
- Trials per Subscriber: 20
- Environment: 參考圖 1

測試結果

SIP → Analog

Call Rate						
Setup Ratio						

Analog → SIP

Call Rate						
Setup Ratio						

A.4 Setup Ratio by WAN Packet Loss Ratio

測試目的

測試 DUT 在只有一個 Call 時，不同 WAN Packet Loss Ratio 值的 Setup Ratio。

測試變因

- WAN Packet Loss Ratio (%): 0.2, 0.5, 1, 2, 5, 10

測試組態

- Subscribers: 1 * Analog + 1 * SIP
- Start Time (ST) (sec): 15
- Call Length (CL) (sec): 3-tone Confirm Length
- Inter-Call Time (IC) (sec): 0 (let CC dominates)
- Call-to-Call Time (CC) (sec): 60
- Start-to-Start Time (SS) (sec): not affects
- Path Confirmation: 3-tone
- Trials per Subscriber: 20
- Environment: 參考圖 2

測試結果

SIP → Analog

Packet Loss Ratio						
Setup Ratio						

Analog → SIP

Packet Loss Ratio						
Setup Ratio						

A.5 Setup Ratio by WAN Packet Dup. Ratio

測試目的

測試 DUT 在只有一個 Call 時，不同 WAN Packet Dup. Ratio 值的 Setup Ratio。

測試變因

- WAN Packet Dup. Ratio (%):0.2, 0.5, 1, 2, 5, 10

測試組態

- Subscribers: 1 * Analog + 1 * SIP
- Start Time (ST) (sec): 15
- Call Length (CL) (sec): 3-tone Confirm Length
- Inter-Call Time (IC) (sec): 0 (let CC dominates)
- Call-to-Call Time (CC) (sec): 60
- Start-to-Start Time (SS) (sec): not affects
- Path Confirmation: 3-tone
- Trials per Subscriber: 20
- Environment: 參考圖 2

測試結果

SIP → Analog

Packet Dup. Ratio						
Setup Ratio						

Analog → SIP

Packet Dup. Ratio						
Setup Ratio						

A.6 Setup Ratio by BG FTP Session Number

測試目的

測試 DUT 在只有一個 Call 時，不同背景 FTP Session Number 值的 Setup Ratio。

測試變因

- FTP Session Number (session): 3, 15, 63, 255, 1023, 4095

測試組態

- Subscribers: 1 * Analog + 1 * SIP
- Start Time (ST) (sec): 15
- Call Length (CL) (sec): 3-tone Confirm Length
- Inter-Call Time (IC) (sec): 0 (let CC dominates)
- Call-to-Call Time (CC) (sec): 60
- Start-to-Start Time (SS) (sec): not affects
- Path Confirmation: 3-tone
- Trials per Subscriber: 20
- Environment: 參考圖 2

測試結果

SIP → Analog

FTP Sessions						
Setup Ratio						

Analog → SIP

FTP Sessions						
Setup Ratio						

A.7 Setup Ratio by BG FTP Session Rate

測試目的

測試 DUT 在只有一個 Call 時，不同背景 FTP Session Rate 值的 Setup Ratio。

測試變因

- FTP New Session Time (sec): 600, 120, 60, 12, 6, 1
  相當於 Session Rate (session/min): 0.1, 0.5, 1, 5, 10, 60

測試組態

- Subscribers: 1 * Analog + 1 * SIP
- Start Time (ST) (sec): 15
- Call Length (CL) (sec): 3-tone Confirm Length
- Inter-Call Time (IC) (sec): 0 (let CC dominates)
- Call-to-Call Time (CC) (sec): 60
- Start-to-Start Time (SS) (sec): not affects
- Path Confirmation: 3-tone
- Trials per Subscriber: 20
- Environment: 參考圖 2

測試結果

SIP → Analog

FTP Session Rate						
Setup Ratio						

Analog → SIP

FTP Session Rate						
Setup Ratio						

B Voice Quality with Access Gateway

Voice Quality with Gateway 是要測試 DUT 在用做 SIP Access Gateway 時(也就是 FXS 方的 Analog Subscriber 與 WAN 方的 SIP Subscriber 互相撥打電話），考慮不同的壓力因素下，建立通話後的語音品質。所有項目的設計，皆是以調整特定的壓力因素來觀察有哪些因素值能夠滿足優良語音品質（min. PESQ >= 4）。

所有用於 Test Group B 的 Topologies 連接示意圖請參考 A 中的圖 1~2。

B.1 Voice Quality by Multiple Calls

測試目的

測試 DUT 在多個 Call 時，不同 Call 數量值的 Voice Quality。

測試變因

- Multiple Calls (C): 1, 2, 5, 7, 10, 14

測試組態

- Subscribers: C * Analog + C * SIP
- Start Time (ST) (sec): 15
- Call Length (CL) (sec): C * SS + 90
- Inter-Call Time (IC) (sec): 0 (let CC dominates)
- Call-to-Call Time (CC) (sec): C * SS + 120
- Start-to-Start Time (SS) (sec): 20
- Path Confirmation: PESQ-123 for Call Length
- Trials per Subscriber: 1
- Environment: 參考圖 1

測試結果

SIP → Analog

Calls						
Min. PESQ						

Analog → SIP

Calls						
Min. PESQ						

B.2 Voice Quality by Multiple Call Rate

測試目的

測試 DUT 在多個 Call 時，不同 Start-to-Start Time 值的 Voice Quality。

測試變因

- Start-to-Start Time (SS) (sec): 20, 10, 6, 3, 2, 1
  相當於 Call Rate (call/min): 3, 6, 10, 20, 30, 60

測試組態

當 B.1 測試結果的 Multiple Calls 最大值為 C_{max}

- Subscribers: C_{max} * Analog + C_{max} * SIP
- Multiple Calls (C): C_{max}
- Start Time (ST) (sec): 15
- Call Length (CL) (sec): C_{max} * SS + 90
- Inter-Call Time (IC) (sec): 0 (let CC dominates)
- Call-to-Call Time (CC) (sec): C_{max} * SS + 120
- Path Confirmation: PESQ-123 for Call Length
- Trials per Subscriber: 1
- Environment: 參考圖 1

測試結果

SIP → Analog

Call Rate						
Min. PESQ						

Analog → SIP

Call Rate						
Min. PESQ						

B.3 Voice Quality by WAN Packet Loss Ratio

測試目的

測試 DUT 在只有一個 Call 時，不同 WAN Packet Loss Ratio 值的 Voice Quality。

測試變因

- WAN Packet Loss Ratio (%): 0.2, 0.5, 1, 2, 5, 10

測試組態

- Subscribers: 1 * Analog + 1 * SIP
- Start Time (ST) (sec): 15
- Call Length (CL) (sec): 90
- Inter-Call Time (IC) (sec): 0 (let CC dominates)
- Call-to-Call Time (CC) (sec): 120
- Start-to-Start Time (SS) (sec): not affects
- Path Confirmation: PESQ-123 for Call Length
- Trials per Subscriber: 1
- Environment: 參考圖 2

測試結果

SIP → Analog

Packet Loss Ratio						
Min. PESQ						

Analog → SIP

Packet Loss Ratio						
Min. PESQ						

B.4 Voice Quality by WAN Packet Dup. Ratio

測試目的

測試 DUT 在只有一個 Call 時，不同 WAN Packet Dup. Ratio 值的 Voice Quality。

測試變因

- WAN Packet Dup. Ratio (%): 0.2, 0.5, 1, 2, 5, 10

測試組態

- Subscribers: 1 * Analog + 1 * SIP
- Start Time (ST) (sec): 15
- Call Length (CL) (sec): 90
- Inter-Call Time (IC) (sec): 0 (let CC dominates)
- Call-to-Call Time (CC) (sec): 120
- Start-to-Start Time (SS) (sec): not affects
- Path Confirmation: PESQ-123 for Call Length
- Trials per Subscriber: 1
- Environment: 參考圖 2

測試結果

SIP → Analog

Packet Dup. Ratio						
Min. PESQ						

Analog → SIP

Packet Dup. Ratio						
Min. PESQ						

B.5 Voice Quality by WAN Delay Distribution

測試目的

測試 DUT 在只有一個 Call 時，不同 WAN Delay Distribution 值的 Voice Quality。

測試變因

- WAN Delay Distribution (Average, Variance) (msec):
  (20, 2), (20, 4), (20, 10), (100, 10) (100, 20), (100, 50)

測試組態

- Subscribers: 1 * Analog + 1 * SIP
- Start Time (ST) (sec): 15
- Call Length (CL) (sec): 90
- Inter-Call Time (IC) (sec): 0 (let CC dominates)
- Call-to-Call Time (CC) (sec): 120
- Start-to-Start Time (SS) (sec): not affects
- Path Confirmation: PESQ-123 for Call Length
- Trials per Subscriber: 1
- Environment: 參考圖 2

測試結果

SIP → Analog

Packet Delay set						
Min. PESQ						

Analog → SIP

Packet Delay set						
Min. PESQ						

B.6 Voice Quality by BG FTP Session Number

測試目的

測試 DUT 在只有一個 Call 時，不同背景 FTP Session Number 值的 Voice Quality。

測試變因

- FTP Session Number (session): 3, 15, 63, 255, 1023, 4095

測試組態

- Subscribers: 1 * Analog + 1 * SIP
- Start Time (ST) (sec): 15
- Call Length (CL) (sec): 90
- Inter-Call Time (IC) (sec): 0 (let CC dominates)
- Call-to-Call Time (CC) (sec): 120
- Start-to-Start Time (SS) (sec): not affects
- Path Confirmation: PESQ-123 for Call Length
- Trials per Subscriber: 1
- Environment: 參考圖 2

測試結果

SIP → Analog

FTP Sessions						
Min. PESQ						

Analog → SIP

FTP Sessions						
Min. PESQ						

B.7 Voice Quality by BG FTP Session Rate

測試目的

測試 DUT 在只有一個 Call 時，不同背景 FTP Session Rate 值的 Voice Quality。

測試變因

- FTP New Session Time (sec): 600, 120, 60, 12, 6, 1
  相當於 Session Rate (session/min): 0.1, 0.5, 1, 5, 10, 60

測試組態

- Subscribers: 1 * Analog + 1 * SIP
- Start Time (ST) (sec): 15
- Call Length (CL) (sec): 90
- Inter-Call Time (IC) (sec): 0 (let CC dominates)
- Call-to-Call Time (CC) (sec): 120
- Start-to-Start Time (SS) (sec): not affects
- Path Confirmation: PESQ-123 for Call Length
- Trials per Subscriber: 1
- Environment: 參考圖 2

測試結果

SIP → Analog

FTP Session Rate						
Min. PESQ						

Analog → SIP

FTP Session Rate						
Min. PESQ						

C Call Setup through Exchange/Router

Call Setup through Exchange/Router 是要測試 DUT 在用做 SIP Exchange 或 Router 時（即 LAN 方的 SIP Subscriber 撥打電話到 WAN 方的 SIP Subscriber），考慮不同的壓力因素下，撥打的建立狀況。所有項目的設計，皆是以調整特定的壓力因素來觀察有哪些因素值能夠滿足完全撥打成功率（100% Call Setup Ratio）。

所有用於 Test Group C 的 Topologies 連接示意圖：

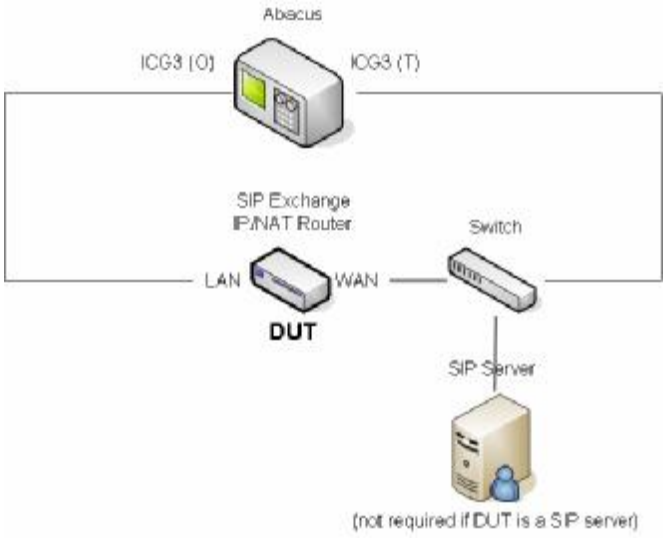

圖 3：SIP/Ethernet → SIP for Call Stress

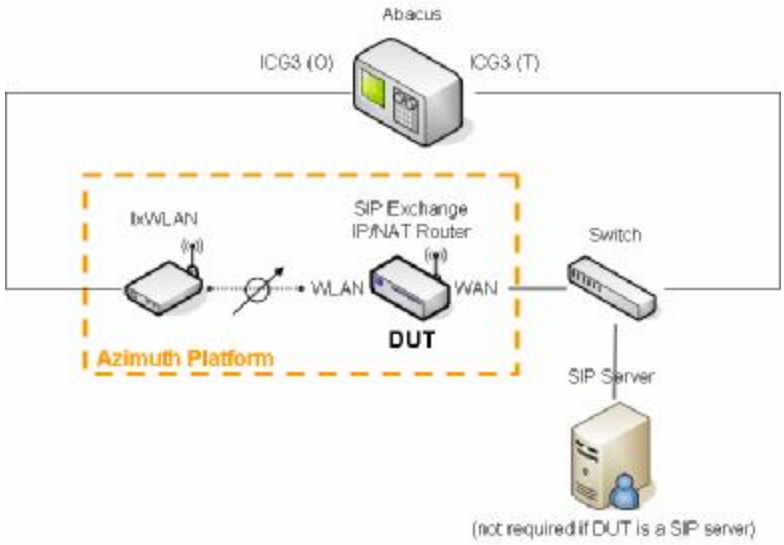

圖 4：SIP/Wireless → SIP for Call Stress

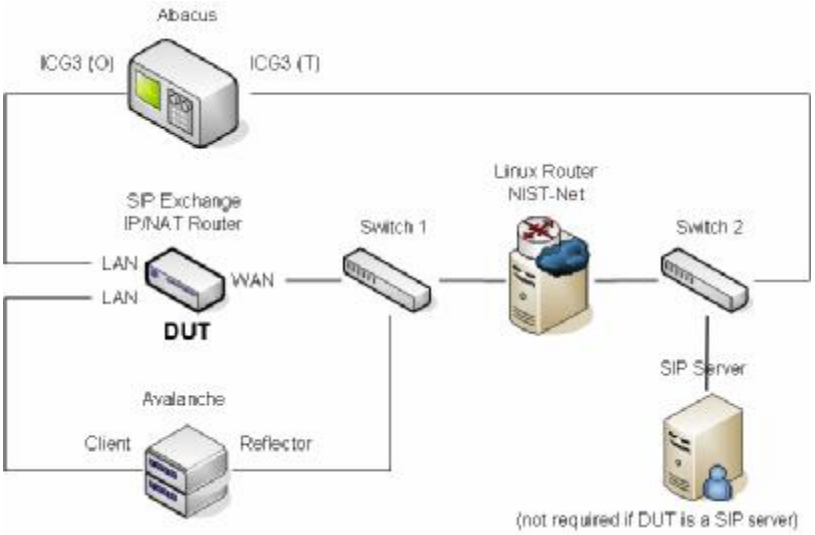

圖 5：SIP/Ethernet → SIP with Impairment/Congestion

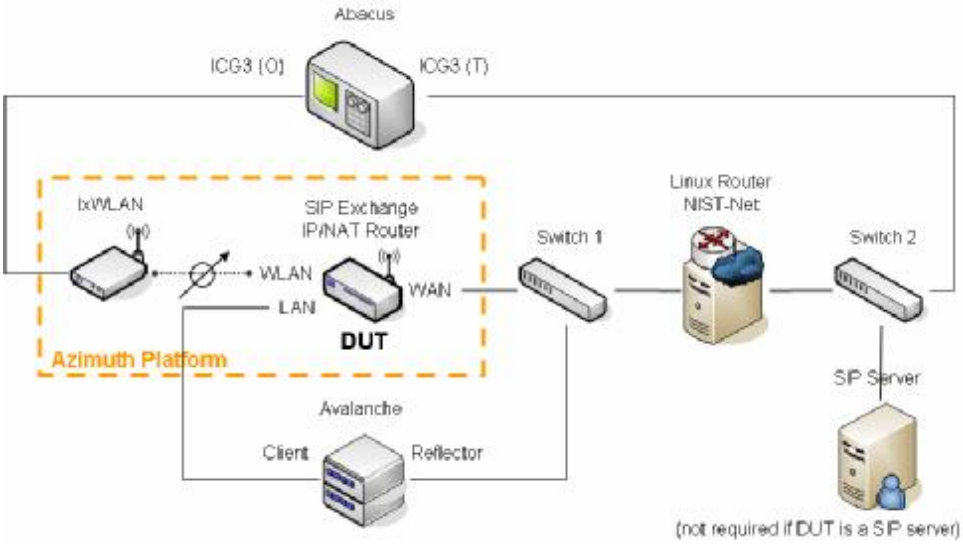

圖 6：SIP/Wireless → SIP with Impairment/Congestion

C.1 Setup Ratio by Single Call Rate

測試目的

測試 DUT 在只有一個 Call 時，不同 Call-to-Call Time 值的 Setup Ratio。
這個項目只適用於 SIP Exchange，當 DUT 用做 Router 時可以略過。

測試變因

- Call-to-Call Time (CC) (sec): 60, 30, 20, 10, 6, 3
  相當於 Call Rate (call/min): 1, 2, 3, 6, 10, 20

測試組態

- Subscribers: 1 * SIP Originate + 1 * SIP Terminate
- Start Time (ST) (sec): 15
- Call Length (CL) (sec): 3-tone Confirm Length
- Inter-Call Time (IC) (sec): 0 (let CC dominates)
- Start-to-Start Time (SS) (sec): not affects
- Path Confirmation: 3-tone
- Trials per Subscriber: 20
- Environment: 參考圖 3 和圖 4

測試結果

SIP/Ethernet → SIP

Call Rate						
Setup Ratio						

SIP/Wireless → SIP

Call Rate						
Setup Ratio						

C.2 Setup Ratio by Multiple Calls

測試目的

測試 DUT 在多個 Call 時，不同 Call 數量值的 Setup Ratio。

測試變因

- Multiple Calls (C): 1, 4, 16, 64, 256, 1024

測試組態

- Subscribers: C * SIP Originate + C * SIP Terminate
- Start Time (ST) (sec): 15
- Call Length (CL) (sec): 3-tone Confirm Length
- Inter-Call Time (IC) (sec): 0 (let CC dominates)
- Call-to-Call Time (CC) (sec): 60
- Start-to-Start Time (SS) (sec): 20
- Path Confirmation: 3-tone
- Trials per Subscriber: 20
- Environment: 參考圖 3 和圖 4

測試結果

SIP/Ethernet → SIP

Calls						
Setup Ratio						

SIP/Wireless → SIP

Calls						
Setup Ratio						

C.3 Setup Ratio by Multiple Call Rate

測試目的

測試 DUT 在多個 Call 時，不同 Start-to-Start Time 值的 Setup Ratio。

測試變因

- Start-to-Start Time (SS) (sec): 20, 10, 6, 3, 2, 1
  相當於 Call Rate (call/min): 3, 6, 10, 20, 30, 60

測試組態

當 C.2 測試結果的 Multiple Calls 最大值為 C_{max}

- Subscribers: C_{max} * SIP Originate + C_{max} * SIP Terminate
- Multiple Calls (C): C_{max}
- Start Time (ST) (sec): 15
- Call Length (CL) (sec): 3-tone Confirm Length
- Inter-Call Time (IC) (sec): 0 (let CC dominates)
- Call-to-Call Time (CC) (sec): 60
- Path Confirmation: 3-tone
- Trials per Subscriber: 20
- Environment: 參考圖 3 和圖 4

測試結果

SIP/Ethernet → SIP

Call Rate						
Setup Ratio						

SIP/Wireless → SIP

Call Rate						
Setup Ratio						

C.4 Setup Ratio by WAN Packet Loss Ratio

測試目的

測試 DUT 在只有一個 Call 時，不同 WAN Packet Loss Ratio 值的 Setup Ratio。這個項目只適用於 SIP Exchange，當 DUT 用做 Router 時可以略過。

測試變因

- WAN Packet Loss Ratio (%): 0.2, 0.5, 1, 2, 5, 10

測試組態

- Subscribers: 1 * SIP Originate + 1 * SIP Terminate
- Start Time (ST) (sec): 15
- Call Length (CL) (sec): 3-tone Confirm Length
- Inter-Call Time (IC) (sec): 0 (let CC dominates)
- Call-to-Call Time (CC) (sec): 60
- Start-to-Start Time (SS) (sec): not affects
- Path Confirmation: 3-tone
- Trials per Subscriber: 20
- Environment: 參考圖 5 和圖 6

測試結果

SIP/Ethernet → SIP

Packet Loss Ratio						
Setup Ratio						

SIP/Wireless → SIP

Packet Loss Ratio						
Setup Ratio						

C.5 Setup Ratio by WAN Packet Dup. Ratio

測試目的

測試 DUT 在只有一個 Call 時，不同 WAN Packet Dup. Ratio 值的 Setup Ratio。這個項目只適用於 SIP Exchange，當 DUT 用做 Router 時可以略過。

測試變因

- WAN Packet Dup. Ratio (%):0.2, 0.5, 1, 2, 5, 10

測試組態

- Subscribers: 1 * SIP Originate + 1 * SIP Terminate
- Start Time (ST) (sec): 15
- Call Length (CL) (sec): 3-tone Confirm Length
- Inter-Call Time (IC) (sec): 0 (let CC dominates)
- Call-to-Call Time (CC) (sec): 60
- Start-to-Start Time (SS) (sec): not affects
- Path Confirmation: 3-tone
- Trials per Subscriber: 20
- Environment: 參考圖 5 和圖 6

測試結果

SIP/Ethernet → SIP

Packet Dup. Ratio						
Setup Ratio						

SIP/Wireless → SIP

Packet Dup. Ratio						
Setup Ratio						

C.6 Setup Ratio by BG FTP Session Number

測試目的

測試 DUT 在只有一個 Call 時，不同背景 FTP Session Number 值的 Setup Ratio。

測試變因

- FTP Session Number (session): 3, 15, 63, 255, 1023, 4095

測試組態

- Subscribers: 1 * SIP Originate + 1 * SIP Terminate
- Start Time (ST) (sec): 15
- Call Length (CL) (sec): 3-tone Confirm Length
- Inter-Call Time (IC) (sec): 0 (let CC dominates)
- Call-to-Call Time (CC) (sec): 60
- Start-to-Start Time (SS) (sec): not affects
- Path Confirmation: 3-tone
- Trials per Subscriber: 20
- Environment: 參考圖 5 和圖 6

測試結果

SIP/Ethernet → SIP

FTP Sessions						
Setup Ratio						

SIP/Wireless → SIP

FTP Sessions						
Setup Ratio						

C.7 Setup Ratio by BG FTP Session Rate

測試目的

測試 DUT 在只有一個 Call 時，不同背景 FTP Session Rate 值的 Setup Ratio。

測試變因

- FTP New Session Time (sec): 600, 120, 60, 12, 6, 1
  相當於 Session Rate (session/min): 0.1, 0.5, 1, 5, 10, 60

測試組態

- Subscribers: 1 * SIP Originate + 1 * SIP Terminate
- Start Time (ST) (sec): 15
- Call Length (CL) (sec): 3-tone Confirm Length
- Inter-Call Time (IC) (sec): 0 (let CC dominates)
- Call-to-Call Time (CC) (sec): 60
- Start-to-Start Time (SS) (sec): not affects
- Path Confirmation: 3-tone
- Trials per Subscriber: 20
- Environment: 參考圖 5 和圖 6

測試結果

SIP/Ethernet → SIP

FTP Session Call						
Setup Ratio						

SIP/Wireless → SIP

FTP Session Call						
Setup Ratio						

D Voice Quality through Exchange/Router

Voice Quality through Exchange/Router 是要測試 DUT 在用做 SIP Exchange 或 Router 時（即 LAN 方的 SIP Subscriber 撥打電話到 WAN 方的 SIP Subscriber），考慮不同的壓力因素下，建立通話後的語音品質。所有項目的設計，皆是以調整特定的壓力因素來觀察有哪些因素值能夠滿足優良語音品質（min. MOS >= 4）。

所有用於 Test Group D 的 Topologies 連接示意圖請參考 C 中的圖 3~6。

D.1 Voice Quality by Multiple Calls

測試目的

測試 DUT 在多個 Call 時，不同 Call 數量值的 Voice Quality。

測試變因

- Multiple Calls (C): 1, 2, 4, 8, 16, 32, 64

測試組態

- Subscribers: C * SIP Originate + C * SIP Terminate
- Start Time (ST) (sec): 15
- Call Length (CL) (sec): C * SS + 90
- Inter-Call Time (IC) (sec): 0 (let CC dominates)
- Call-to-Call Time (CC) (sec): C * SS + 120
- Start-to-Start Time (SS) (sec): 20
- Path Confirmation: PESQ-123 for Call Length
- Trials per Subscriber: 1
- Environment: 參考圖 3 和圖 4

測試結果

SIP/Ethernet → SIP

Calls						
Min. PESQ						

SIP/Wireless → SIP

Calls						
Min. PESQ						

D.2 Voice Quality by Multiple Call Rate

測試目的

測試 DUT 在多個 Call 時，不同 Start-to-Start Time 值的 Voice Quality。

測試變因

- Start-to-Start Time (SS) (sec): 20, 10, 6, 3, 2, 1
  相當於 Call Rate (call/min): 3, 6, 10, 20, 30, 60

測試組態

當 D.1 測試結果的 Multiple Calls 最大值為 C_{max}

- Subscribers: C_{max} * SIP Originate + C_{max} * SIP Terminate
- Multiple Calls (C): C_{max}
- Start Time (ST) (sec): 15
- Call Length (CL) (sec): C_{max} * SS + 90
- Inter-Call Time (IC) (sec): 0 (let CC dominates)
- Call-to-Call Time (CC) (sec): C_{max} * SS + 120
- Path Confirmation: PESQ-123 for Call Length
- Trials per Subscriber: 1
- Environment: 參考圖 3 和圖 4

測試結果

SIP/Ethernet → SIP

Call Rate						
Min. PESQ						

SIP/Wireless → SIP

Call Rate						
Min. PESQ						

D.3 Voice Quality by BG FTP Session Number

測試目的

測試 DUT 在只有一個 Call 時，不同背景 FTP Session Number 值的 Voice Quality。

測試變因

- FTP Session Number (session): 3, 15, 63, 255, 1023, 4095

測試組態

- Subscribers: 1 * SIP Originate + 1 * SIP Terminate
- Start Time (ST) (sec): 15
- Call Length (CL) (sec): 90
- Inter-Call Time (IC) (sec): 0 (let CC dominates)
- Call-to-Call Time (CC) (sec): 120
- Start-to-Start Time (SS) (sec): not affects
- Path Confirmation: PESQ-123 for Call Length
- Trials per Subscriber: 1
- Environment: 參考圖 5 和圖 6

測試結果

SIP/Ethernet → SIP

FTP Sessions						
Min. PESQ						

SIP/Wireless → SIP

FTP Sessions						
Min. PESQ						

D.4 Voice Quality by BG FTP Session Rate

測試目的

測試 DUT 在只有一個 Call 時，不同背景 FTP Session Rate 值的 Voice Quality。

測試變因

- FTP New Session Time (sec): 600, 120, 60, 12, 6, 1
  相當於 Session Rate (session/min): 0.1, 0.5, 1, 5, 10, 60

測試組態

- Subscribers: 1 * SIP Originate + 1 * SIP Terminate
- Start Time (ST) (sec): 15
- Call Length (CL) (sec): 90
- Inter-Call Time (IC) (sec): 0 (let CC dominates)
- Call-to-Call Time (CC) (sec): 120
- Start-to-Start Time (SS) (sec): not affects
- Path Confirmation: PESQ-123 for Call Length
- Trials per Subscriber: 1
- Environment: 參考圖 5 和圖 6

測試結果

SIP/Ethernet → SIP

FTP Session Rate						
Min. PESQ						

SIP/Wireless → SIP

FTP Session Rate						
Min. PESQ						